Rising

# B CUBE FREEDOM PLUS

## USER AND INSALLATION MANUEL

V2/160920

**Manufacturer of Retractable Pergolas, Awnings and Controlled Vertical Curtains for Your Outdoor Places**

INDEX

Symbols and their meanings
Descriptions
Screws to be Used During Assembly
Assembly steps

Throughout these instructions symbols and tools are provided;

MANPOWER REQUIRED - Use Help, where this is shown, 2 or 3 people are required to safely complete this step. To avoid injury or damage to the assembly make sure to get some help.

POWER Drill/USER REQUIRED - Pre-drill a pilot hole before fastening screw or lag to prevent splitting.

HIGH SPEED STEEL (HSS) DRILL BITS REQUIRED – 6,5-10, 16

MULTIPURPOSE DRILL BITS REQUIRED -6,5- 10, 16

SILICONE & SILICONE GUN REQUIRED

MALLET & HAMMER REQUIRED

MEASURING TAPE REQUIRED - Use a measuring tape to assure accurate measurements.

SPIRIT LEVEL REQUIRED - Use a spirit level to match elevations of location.

STEP LADDER REQUIRED - Use a step ladder where necessary to avoid serious injury.

BI-METAL HOLESAW REQUIRED - Use a Bi-Metal Holesaw to open drain holes (50mm & 70mm)

Wear Safety Glasses and apply required Health and Safety Rules

Our valued customer,

Thank you for choosing and purchasing our RISING brand product. We are pleased to provide you in this guide with the correct procedures for the use and maintenance of the shading system you have purchased. Please contact your Dealer directly for all your future requirements. Even if you have made your purchase, we would like to point out that we, together with RISING and our authorized dealer, will be happy to support you with any problems that may arise during the installation of your product and during the warranty period of your product.
Safety rules,
Details you need to pay attention to, especially during assembly operations;

- Do not smoke and handle flammable materials carefully;
- Use an assistant at the specified points.
- Before drilling holes in walls, always make sure that there are no water, electricity or gas pipes in the selected area;
- - Electrical systems must only be installed by persons with relevant authorization;
- - For electrical equipment, follow the instructions in the relevant installation manuals. When removing the packaging, be careful not to damage the items inside.

It is recommended to use "Rubber" headed hammers at the assembly point. Use appropriate protective materials to prevent any damage during the assembly of various elements. Spread these protective materials on the floor and spread the "heavy" items that need to be assembled with other items on them.

Do not turn your product on or off during heavy snowstorms or extremely harsh weather conditions. Take reasonable care to remove accumulated dirt and debris from the track. Parts of your product may have sharp corners. Always use gloves to prevent cuts. Lubrication of the paddle wheels and track (included in the kit) should be done annually. The fabric and retractable pergola can be removed/separated seasonally to extend its lifespan. To keep the fabric of your RISING retractable pergola looking clean and shiny, wash it monthly with a soft brush, warm water and mild soap, making sure the product is disconnected from electricity. Please do not use detergent and similar chemicals.

Do not let children play with the controller. Keep the remote control out of reach of children.

Frequently inspect the product for any damage or wear on the cables. If repair is required, do not use the product.

We have a 2-year limited manufacturer's warranty. Please see the TERMS AND CONDITIONS OF SALE, together with the Special Conditions that will apply to all your purchases of Goods and Services.

If there is a missing part in the product you have purchased, you can call our RISING outdoor Customer Support Line at +90 212 444 1 886 or request support via e-mail at world@risingoutdoor.eu

It is our commitment to deliver spare parts with free shipping within 10 business days after the delivery of your purchase. After the 10 business day grace period, spare parts will not be provided free of charge.

| SCREWS AND PARTS WHICH WILL BE USED IN INSTALLATION SECTION | | | | |
|---|---|---|---|---|
| NO | SCREW NAME | SCREW PICTURE | APPARATUS OR TOOL NAME | APPARATUS OR TOOL PICTURE |
| 1 | YHB 6,3X22 A2 |  | 4MM 1/4 SCREWDRIVER BLADE |  |
| 2 | AKB M10X45 DIN933 |  | 17mm 1/4inç SOCKET |  |
| 3 | NUT M10 GEOMET COATED |  | 17mm 1/4inç SOCKET |  |
| 4 | YHB 4,8X22 STAR COUNTERSUNK FLAT HEAD SELF TAPPING SCREW |  | 4MM 1/4 SCREWDRIVER BLADE |  |
| 5 | HB İMBUS CIVATA M8X30 A2 |  | 5 ALLEN TOOL |  |
| 6 | M8 GEOMET COATED NUT |  | 13mm SOCKET |  |
| 7 | M8 PUL A2 |  | BY HAND |  |
| 8 | M6 SETİSKUR |  | 4 ALLEN TOOL |  |
| 9 | SPRING LOCK RING (INSTALLED ON THE REDUCER FRONT PIN.) |  | 6.5 CIRCLIP PLIERS |  |
| 10 | AKB M5X16 DIN933 BOLT (USED DURING ADDING BELT.) |  | 10 WRENCH |  |
| 11 | YSB 4.8X16 SCREW |  | 4MM 1/4 SCREWDRIVER BLADE |  |
| 12 | HB İMBUS SCREW M5X20 A2 (USED DURING ADDING BELT.) |  | 3 ALLEN WRENCH |  |
| 13 | FIBERED M5 NUT (MOTOR IT IS ATTACHED TO T NUTS DURING THE FRONT COVER INSTALLATION.) |  | 10 WRENCH |  |
| 14 | 7,5X100 BULLDEX SCREW |  | TOMAX T30 |  |

1-Mark each area before installing each posts.

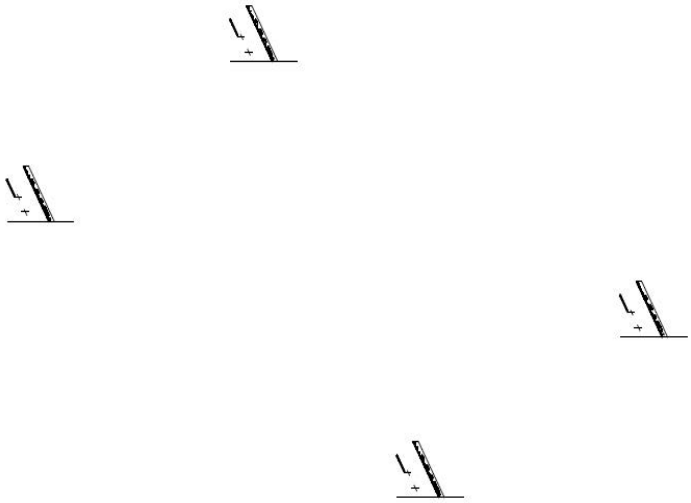

2- Ground mounting apparatus are placed in their places, posts are inserted in to them.

Place the posts into the ground mounting brackets.

Drill with a Ø5 drill at the level of the holes of the ground mounting apparatus.

Assemble the device using YHB 6.3x22 A2 screws through the posts on the sides.

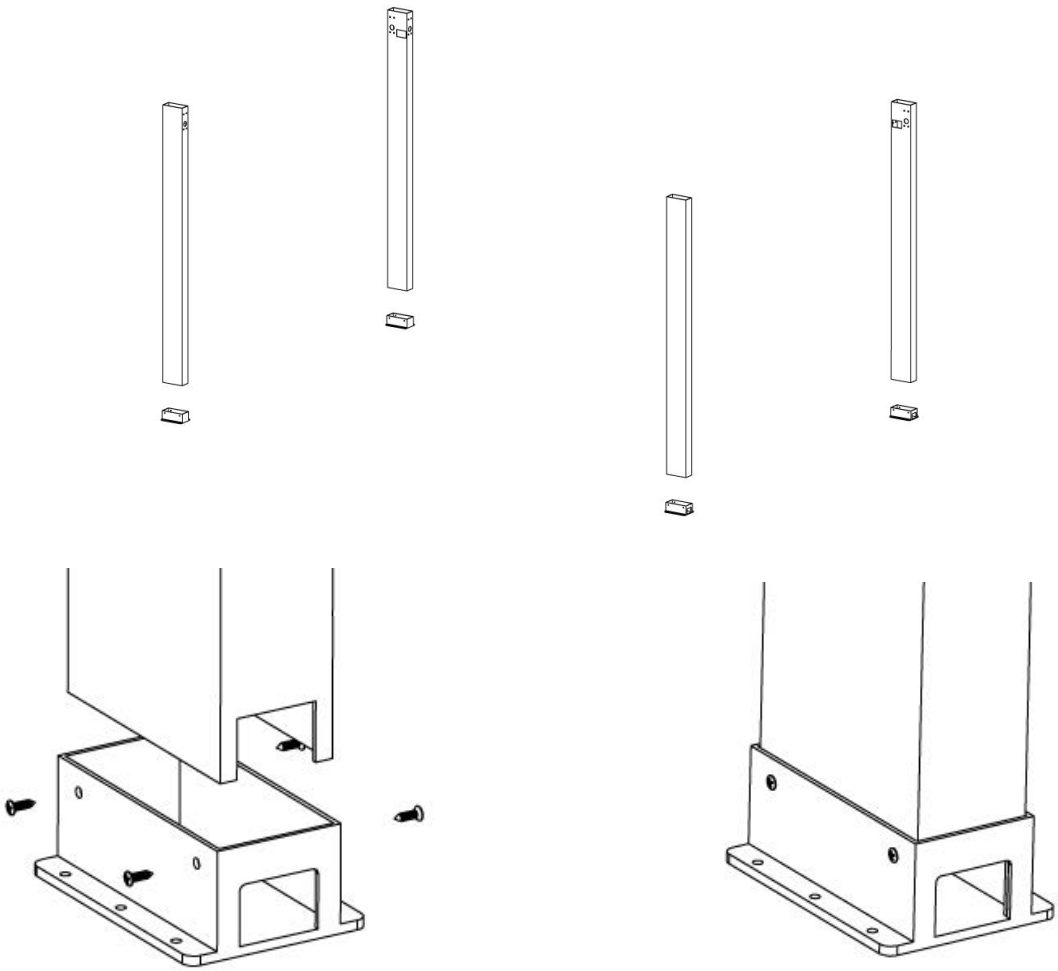

3) First, connect the front and rear rails to the posts with M10x45 AKB DIN933 bolts and nuts.

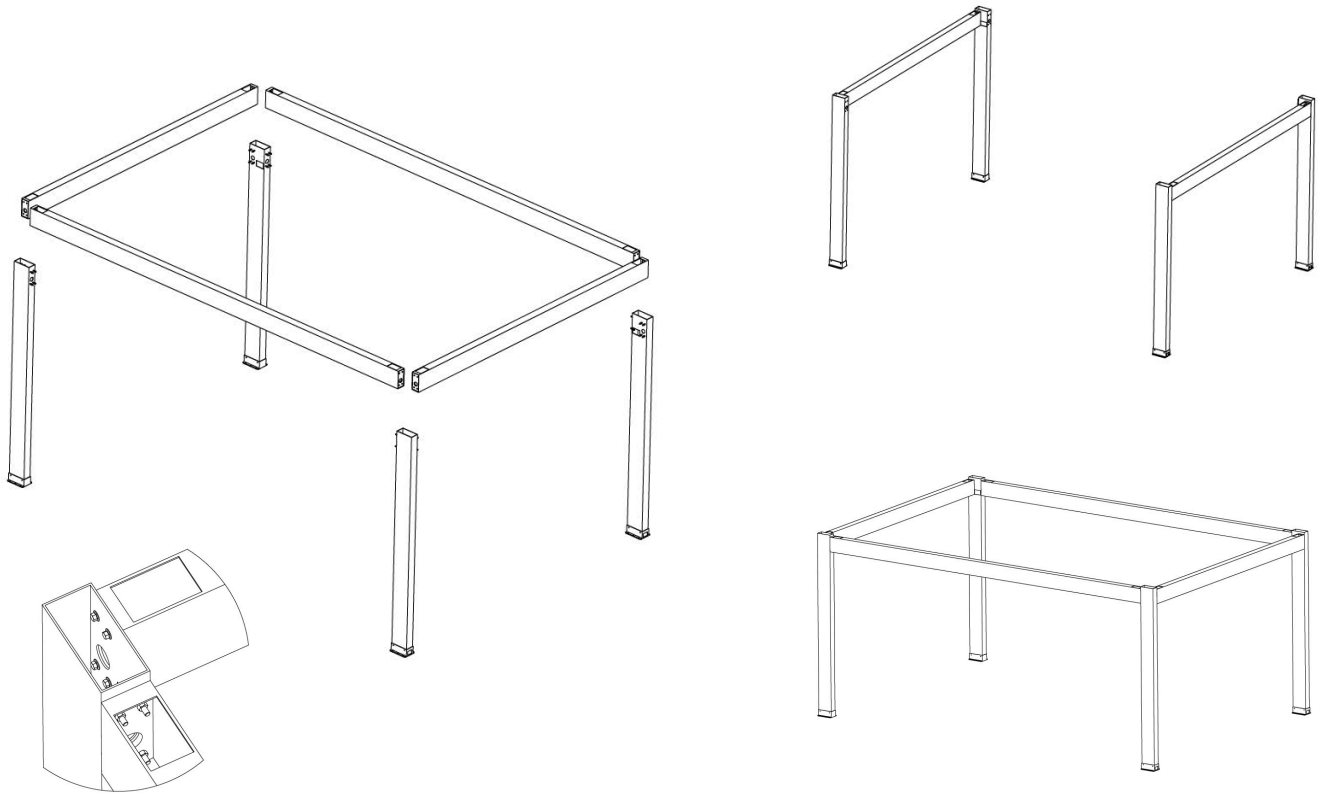

4) Place the gutters in their places and check the cutting dimensions. Then apply silicone around the holes. Securely fix the rear, front and side gutters to the records with YHB 4.8X22 self-tapping screws. Apply silicone to all edges of the gutters.

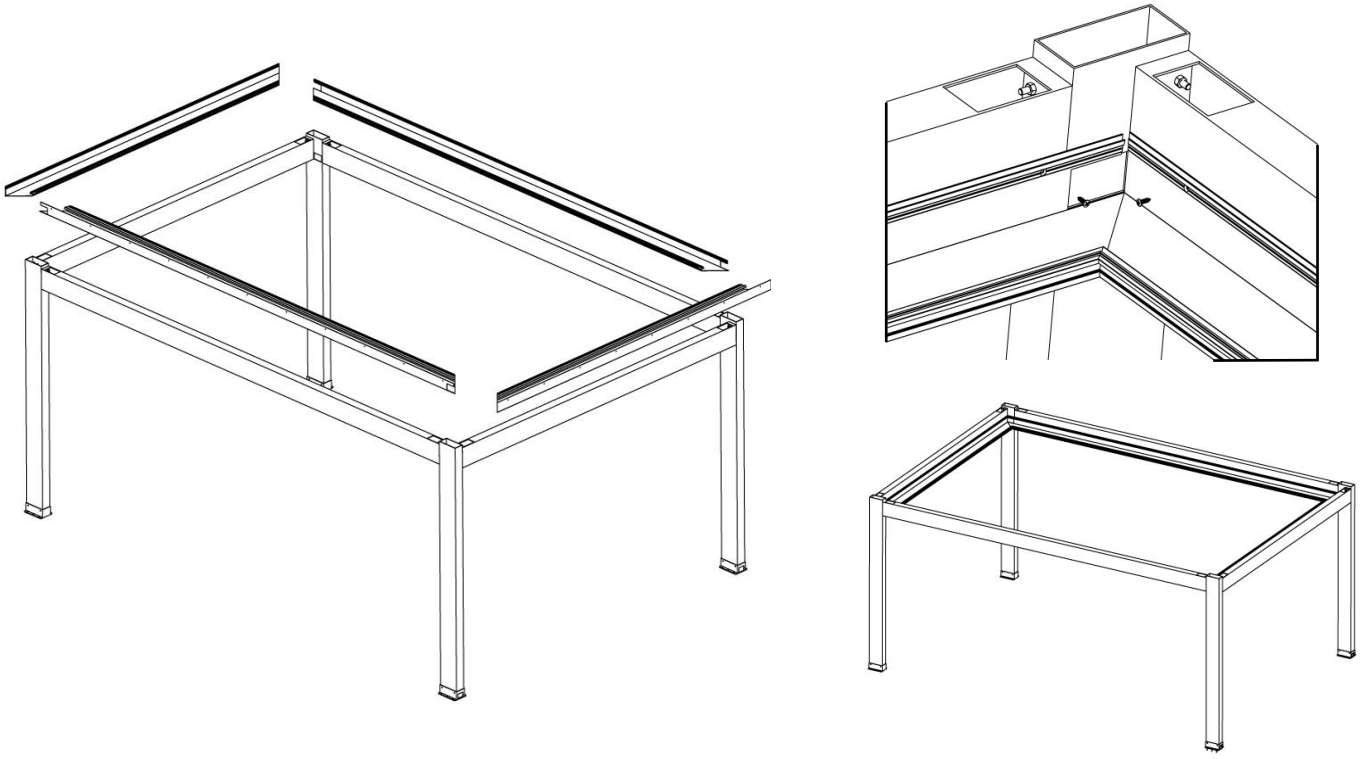

5) Fix the engine mounts to the back of the product, on top of the gutters, to the rear record and the strut with M8X30 countersunk head Imbus bolt and nut, in contact with the post.

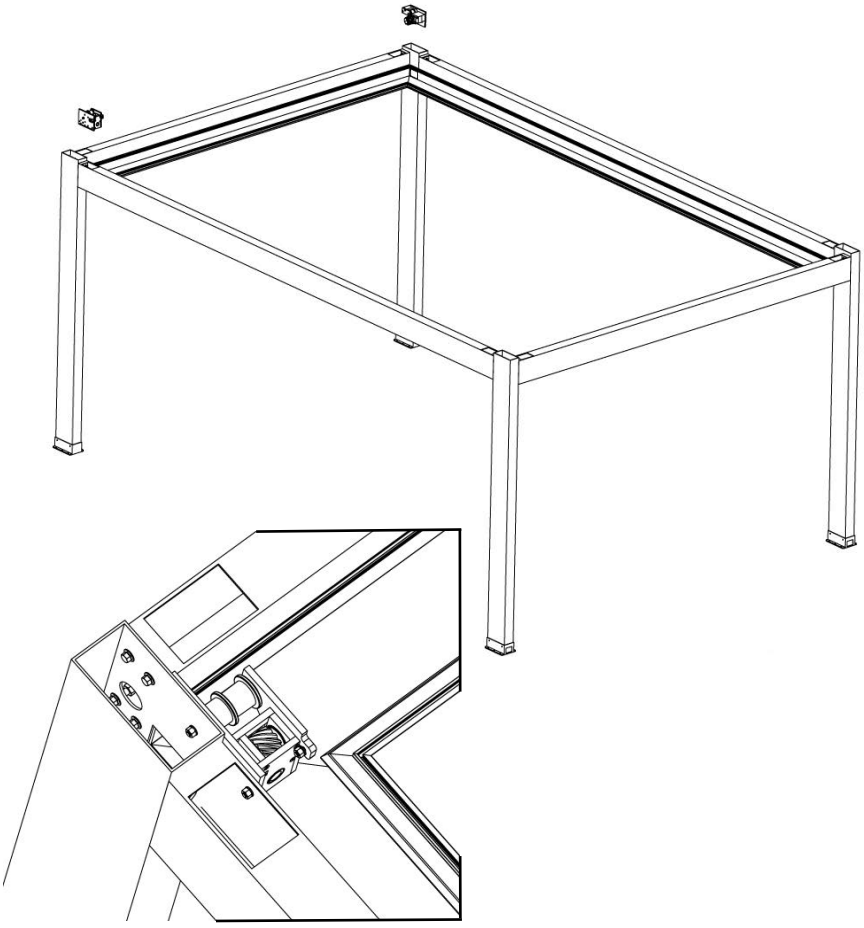

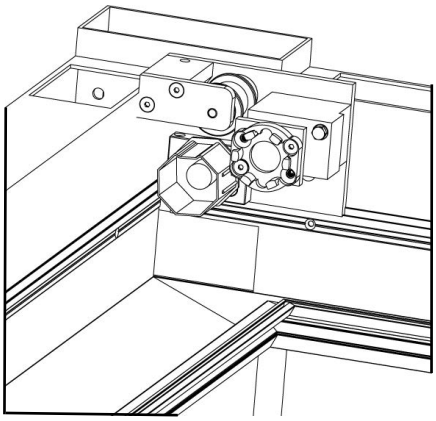

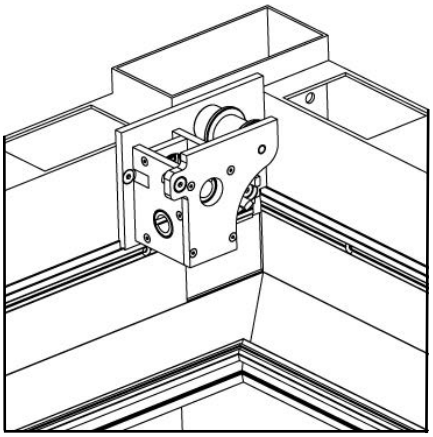

6) Before placing the rails, drill the mounting holes for the belt tensioning apparatus on the product.
Position the rails over the gutter and secure them to the guides using YHB 4.8x22 self-drilling screws.
After checking the cleanliness of the shaft rod, grease it and insert it into the motor housing.
Attach the shaft locking bushing to the shaft rod, then push the shaft rod into the left motor housing.

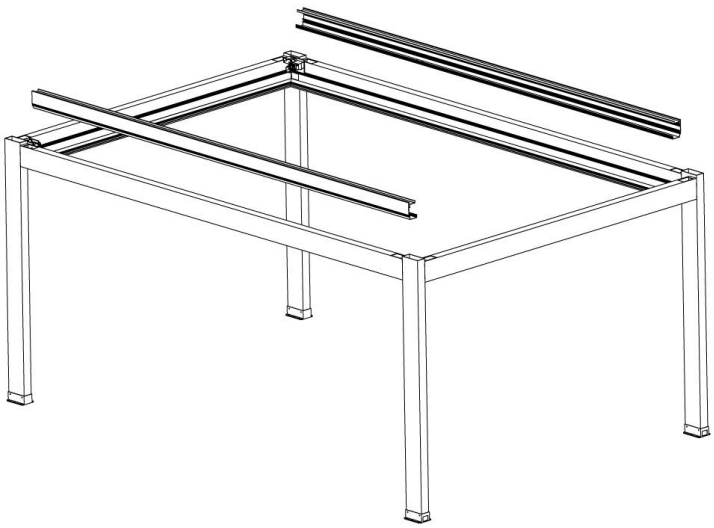

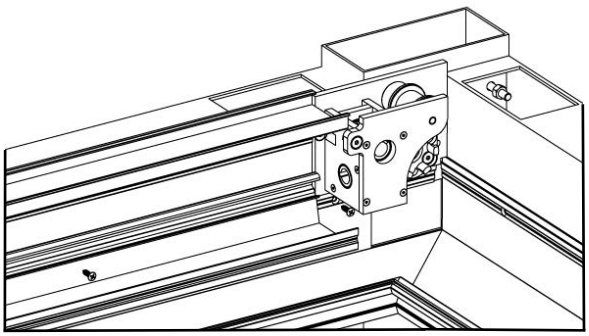

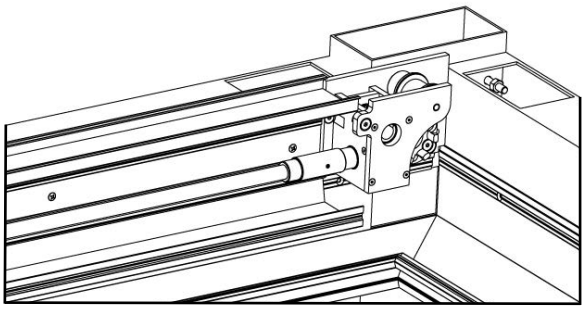

7) Combine the panel with appropriate reducers. At this stage, be careful not to move the side of the left reducer where the shaft is inserted.

Place the panel combined with the reducers on the rail.

After passing the shaft rod through the reducer, carefully slide the panel along the rail, facing each other.

After the last panel (the panel where the tractor reducers will be installed is the last panel) is installed, attach the shaft support reducer to the rail and pass the shaft through it.

Go between the first panel you installed, at the very back of the product, and the motor bearings.

Fix the first reducers by inserting the reducer fixing plate on the motor bearings into the pin on the reducers.

Then, use the scissors included in the box with the one suitable for the direction you are working (There are two types of scissors included in the box, right and left. You must use the scissors whichever side you are working on is relative to the front of the product.) Insert the scissors into the reducer pins in order from the back to the front and carefully install the snap rings. .

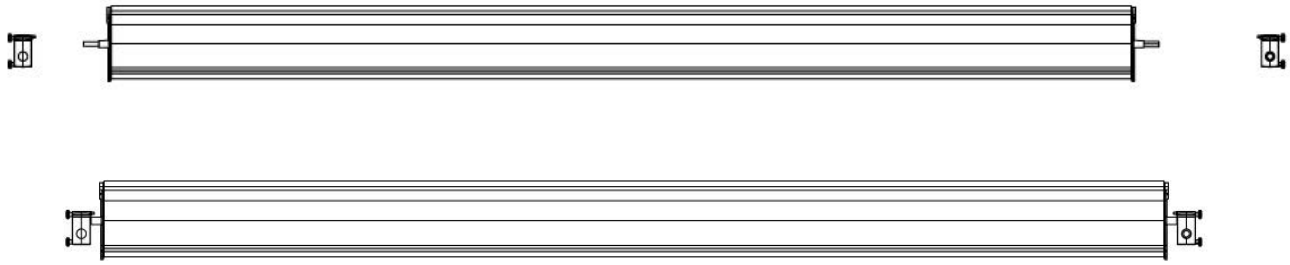

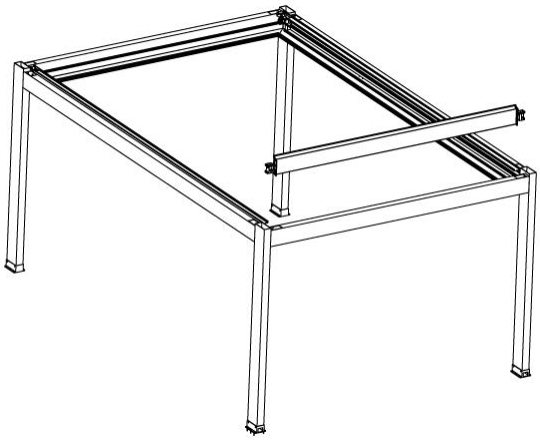

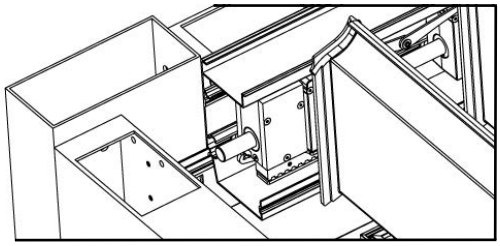

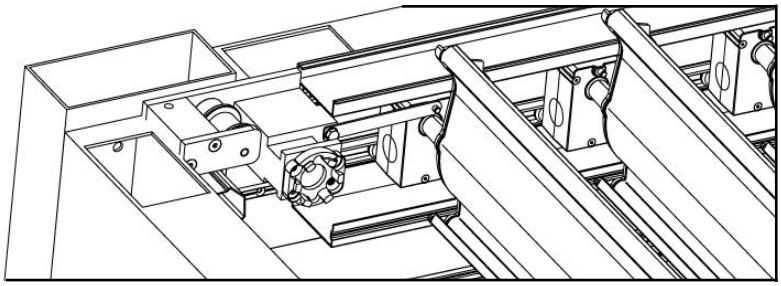

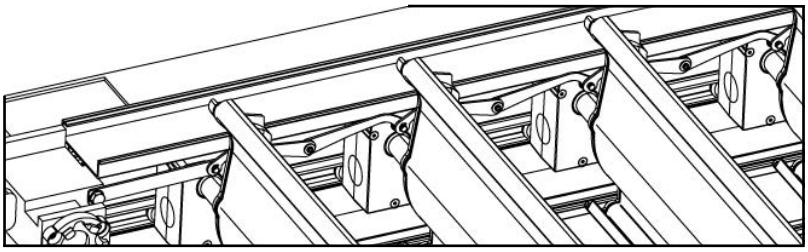

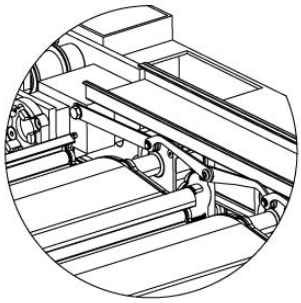

8) Place the belt tensioners on the gutter and fix them through the holes you opened in the front register. Bear the shaft rod by inserting it into the belt tensioner.

.

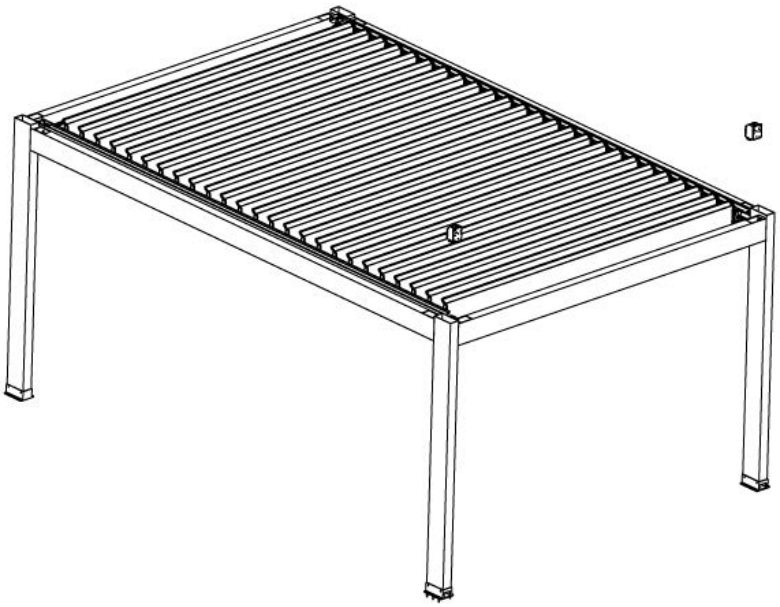

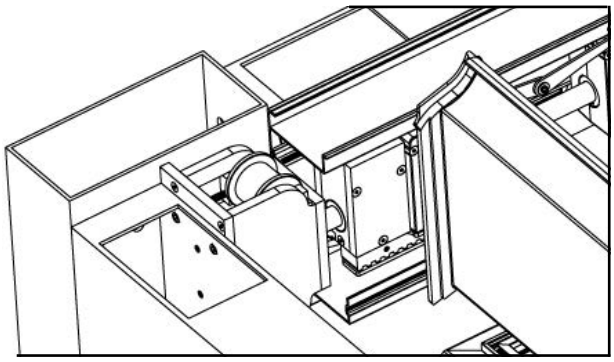

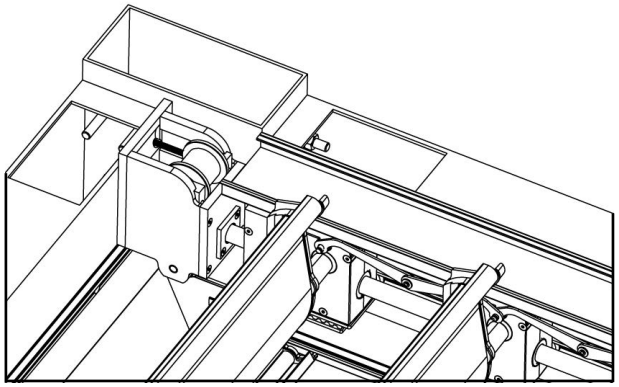

9) Place the octagonal pipes on which the timing pulleys and engines are attached to the engine bearings.

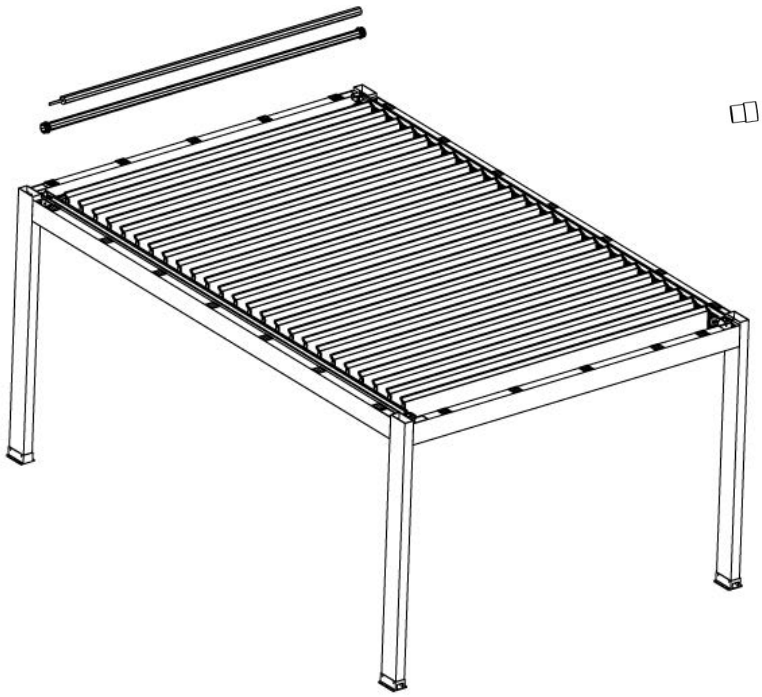

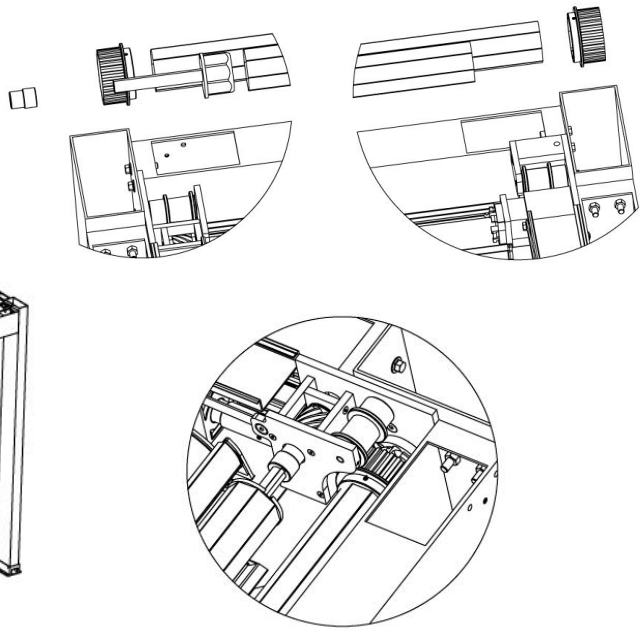

10) Attach the belt to the system and assemble it in the belt attachment apparatus located under the tractor reducers.
Adjust the tension of the belt using the belt tensioning apparatus and make the limit settings of the motors.

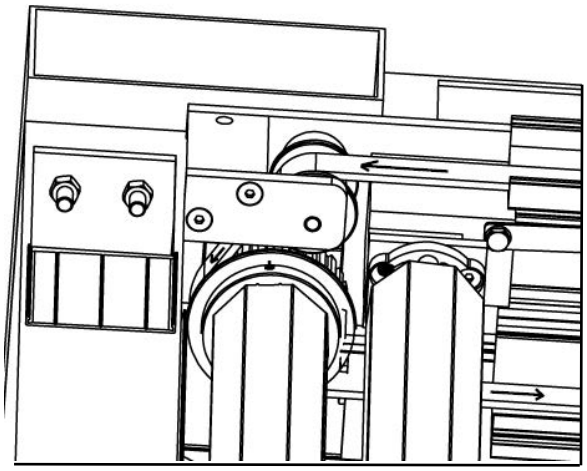

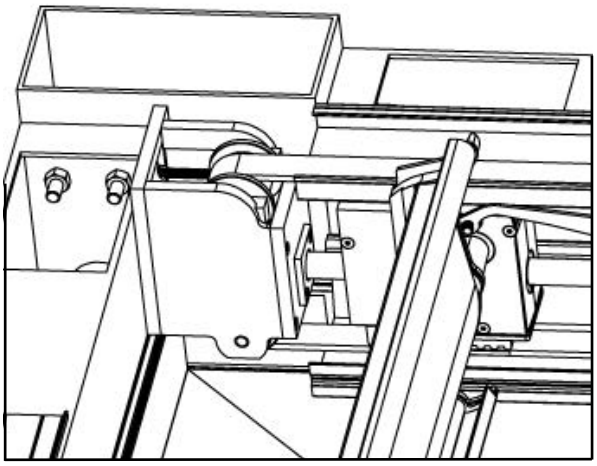

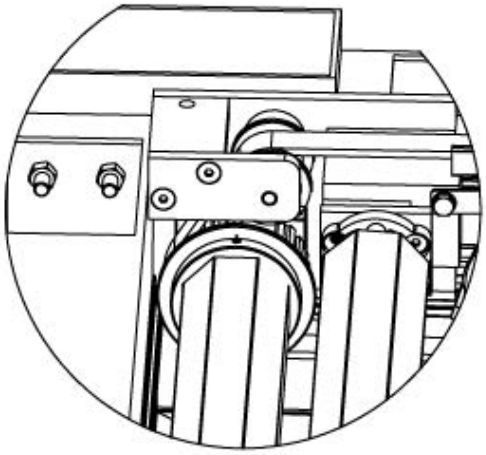

11) Place the rafter protection profiles in place, then fix them with YSB 4.8X16 self-tapping screws.

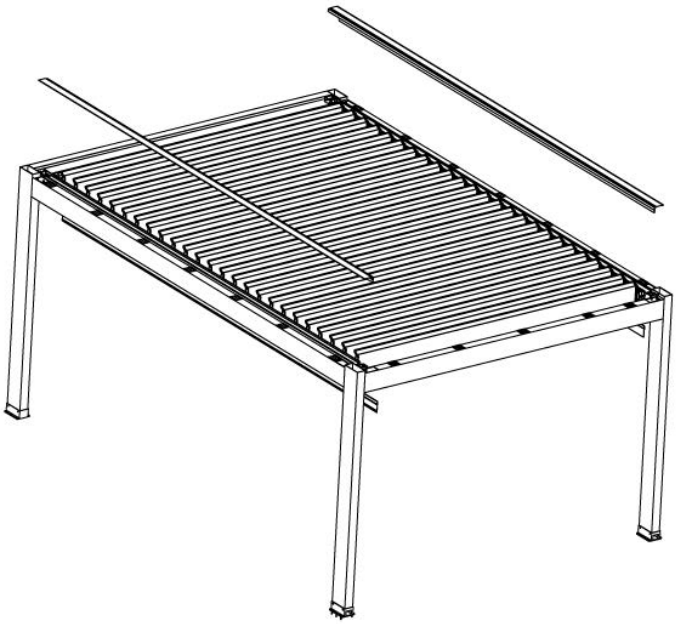

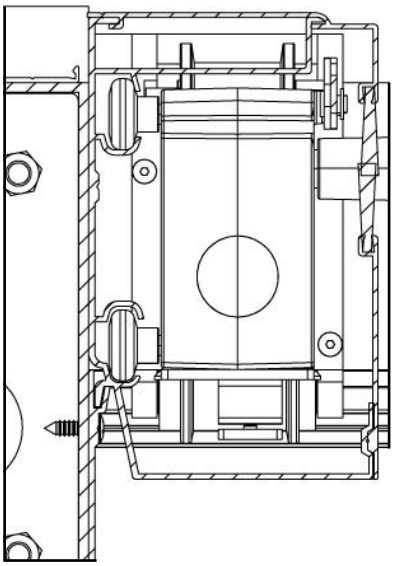

12) Place the first of the front closing profiles on the gutter and fix it with YSB 4.8x16 A2 screw.

Place the second profile on the fixed profile, adjust it according to the distance of the panel and fix it with YSB 4.8X22 A2 screw.

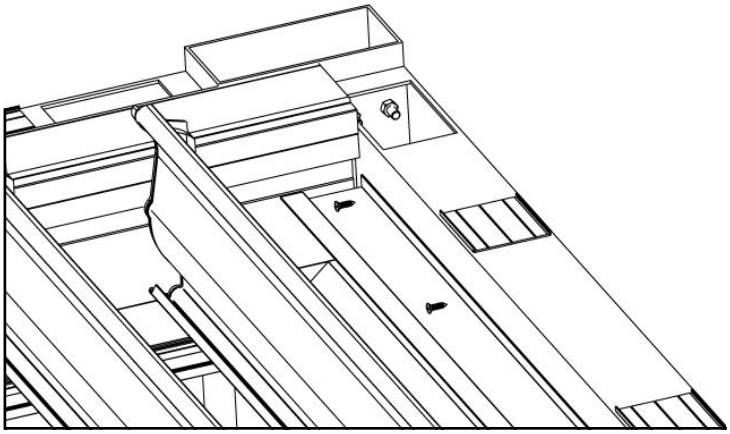

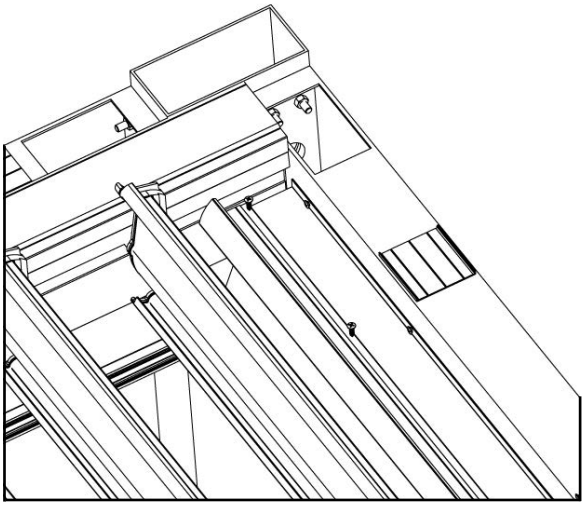

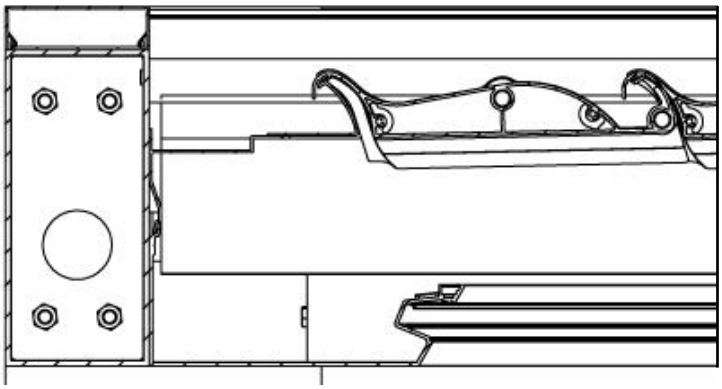

13) Place the second profile on the fixed profile, adjust it according to the distance of the panel and fix it with YSB 4.8X22 A2 screw.

Place the first of the engine cover profiles on the groove. Secure it with the help of t-nuts in the groove. Place the engine rear cover over the front cover and the rear register elevation profile and fix it with the YSB 4.8X16 A2 self-tapping screw..

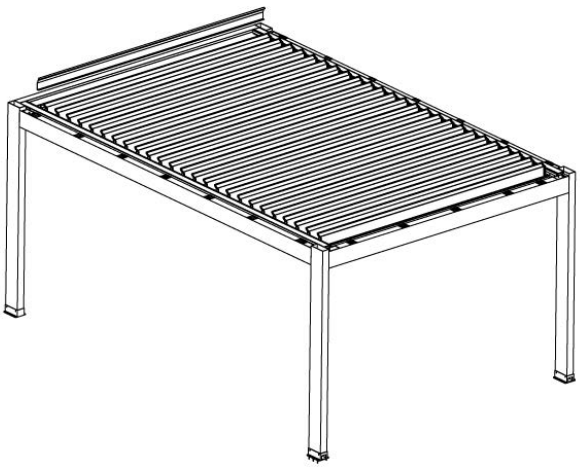

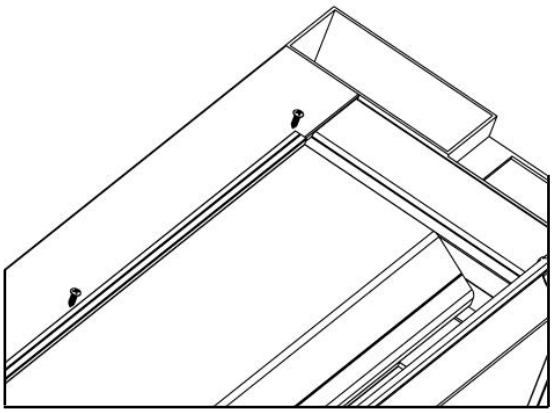

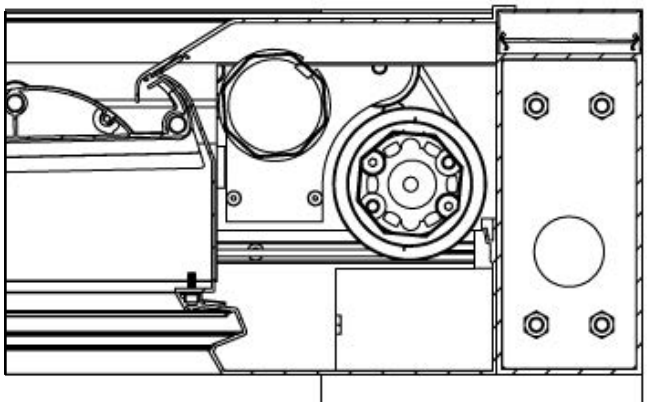

14) Insert the remaining registration upgrades into place

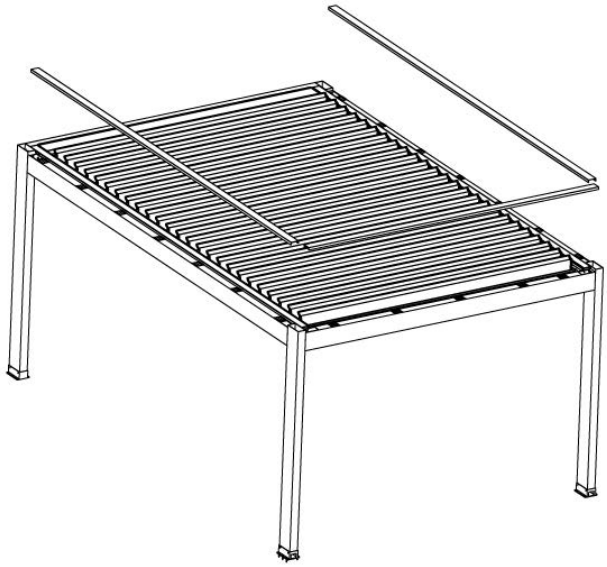

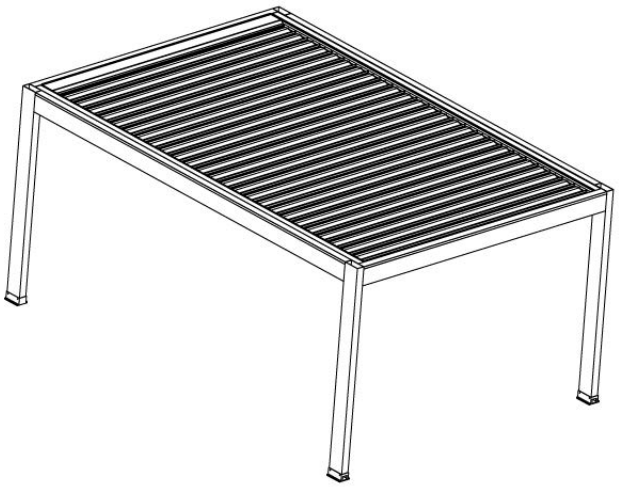

15) Mount the product on the ground with 7.5x100 BULLDEX screws.

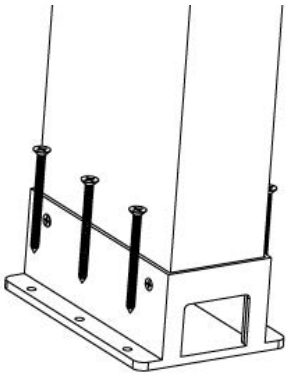

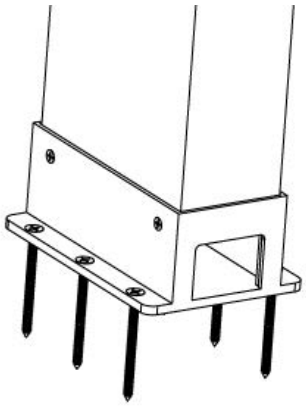

Rising

THANK YOU

www.risinglobal.com